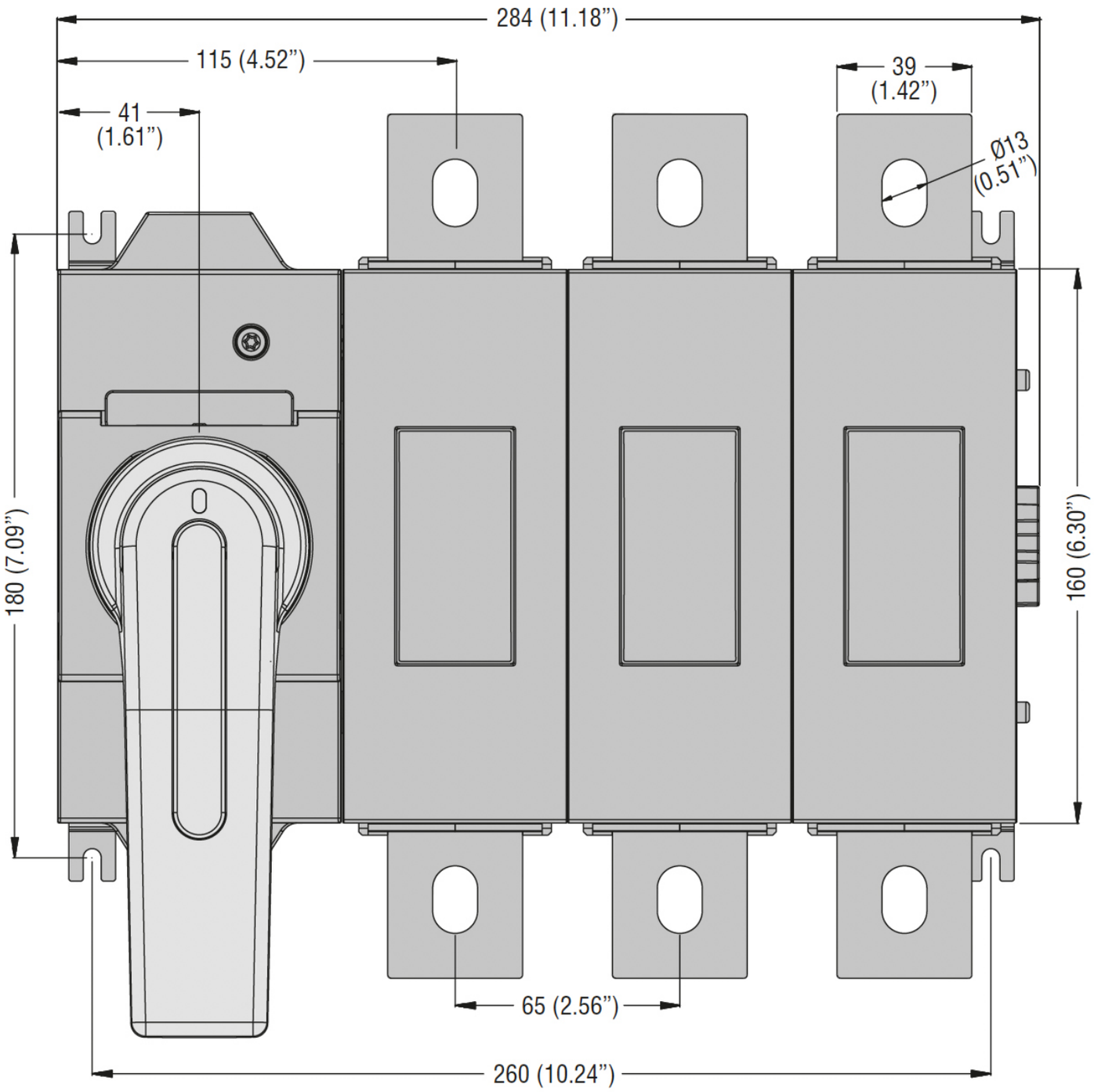
284 (11.18”)
115 (4.52”)
41
(1.61”)
39
(1.42”)
Ø13
(0.51”)
180 (7.09”)
160 (6.30”)
65 (2.56”)
260 (10.24”)

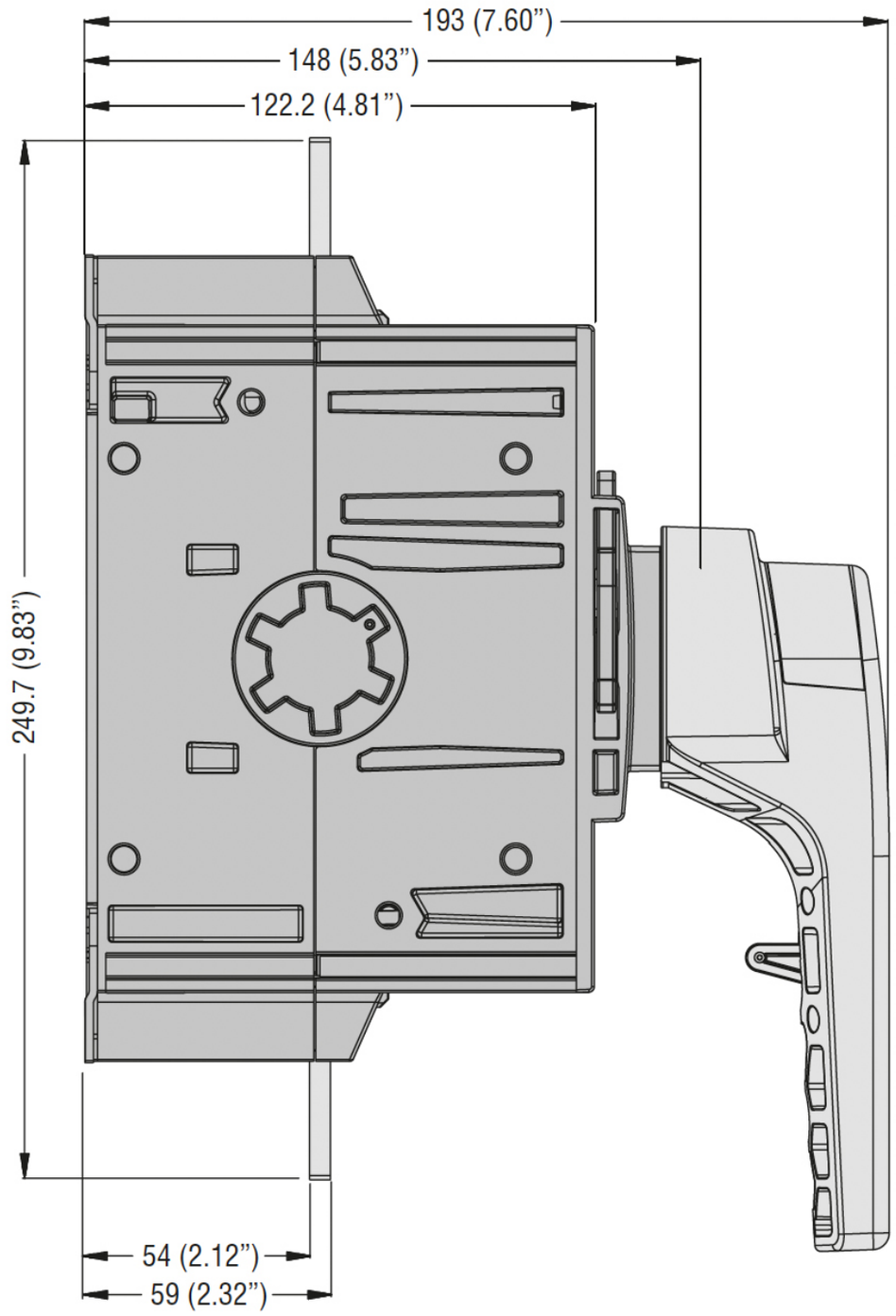
193 (7.60”)
148 (5.83”)
122.2 (4.81”)
249.7 (9.83”)
54 (2.12”)
59 (2.32”)