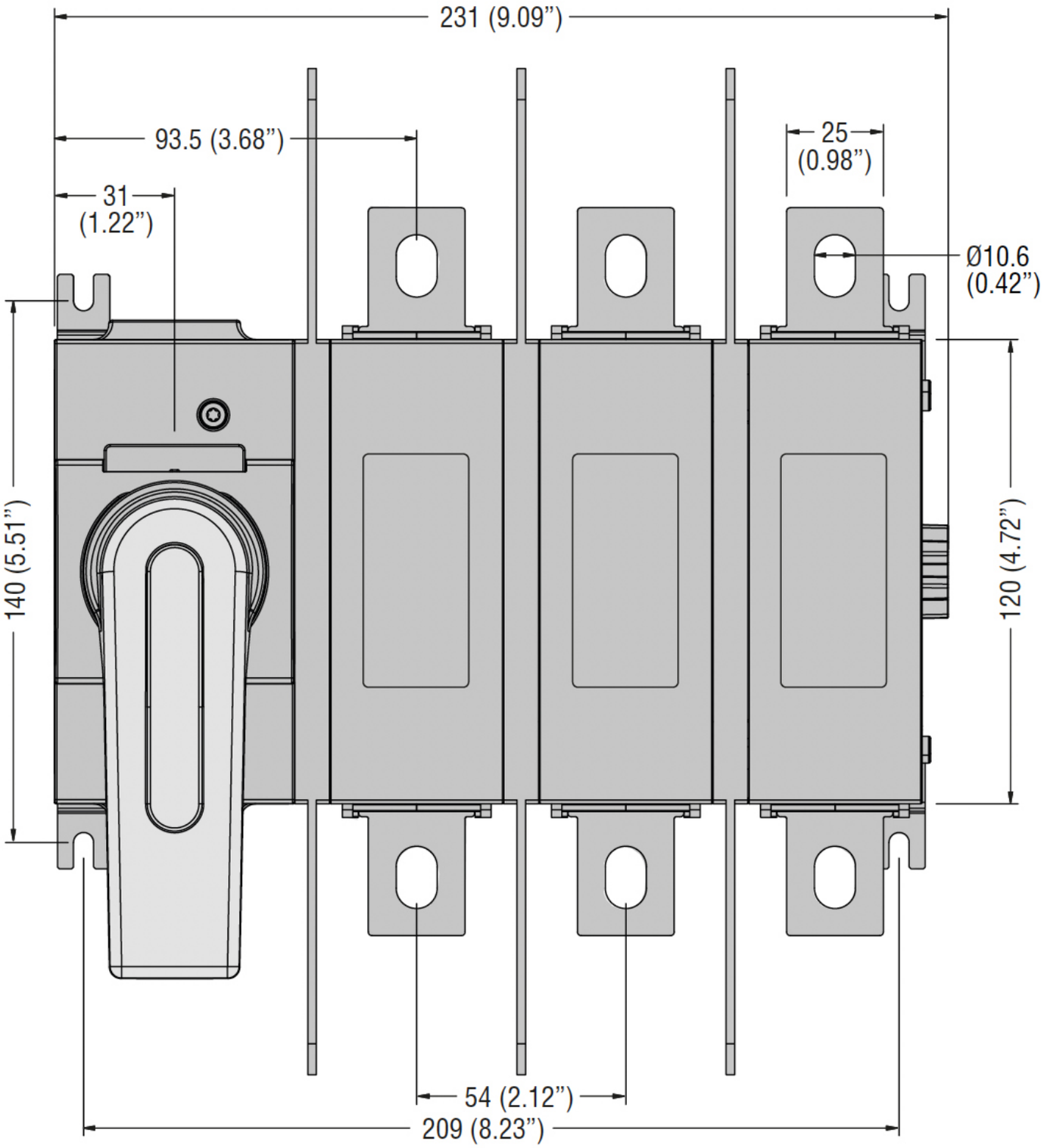
231 (9.09”)
93.5 (3.68”)
31
(1.22”)
25
(0.98”)
Ø10.6
(0.42”)
140 (5.51”)
120 (4.72”)
54 (2.12”)
209 (8.23”)

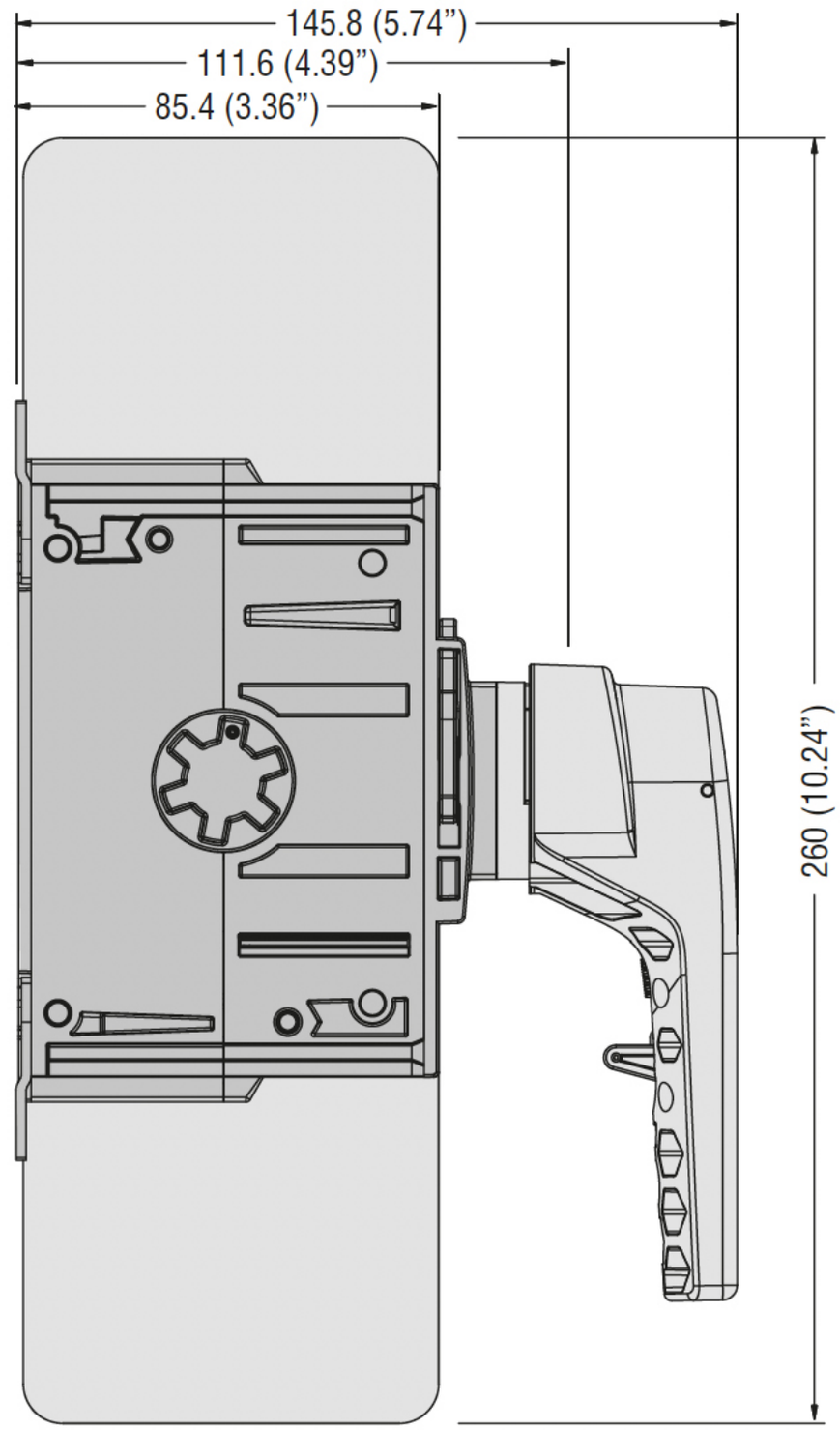
145.8 (5.74”)
111.6 (4.39”)
85.4 (3.36”)
260 (10.24”)